PROPRIETARY AND CONFIDENTIAL

THE INFORMATION CONTAINED IN THIS DRAWING IS THE SOLE PROPERTY OF SPACE OPTICS RESEARCH LABS, LLC (SORL). ANY REPRODUCTION, DISSEMINATION OR OTHER USE IN PART OR AS A WHOLE WITHOUT THE WRITTEN PERMISSION OF SORL IS PROHIBITED.

REVISIONS - A

ECN	REV.	DESCRIPTION	DATE	APPROVED
	A	INITIAL RELEASE	3/25/2013	N. POWERS

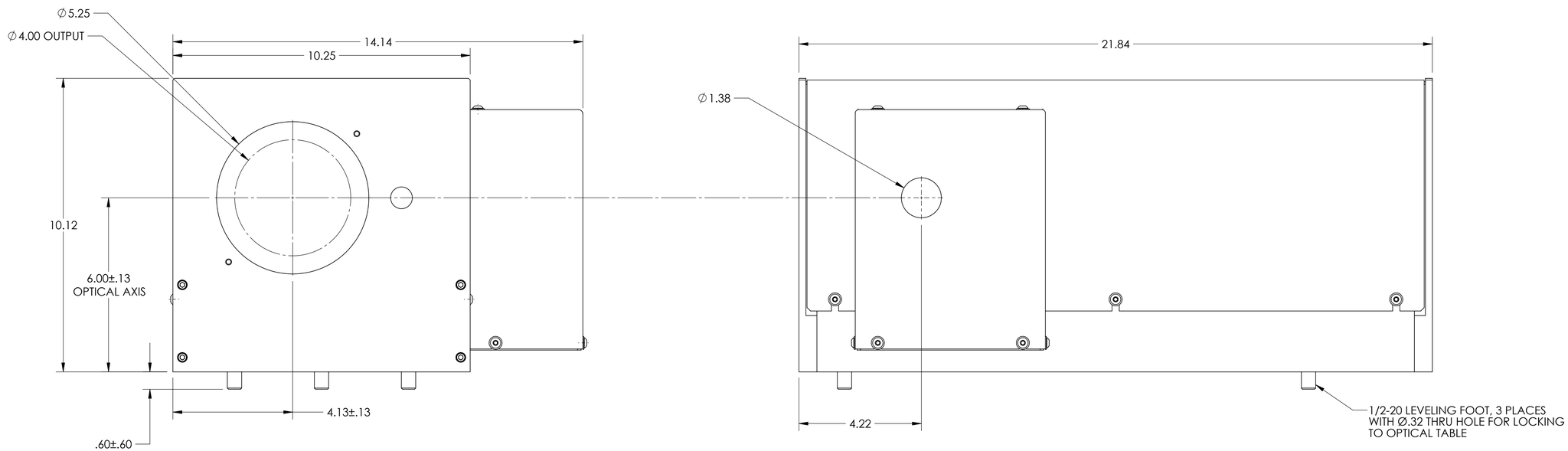

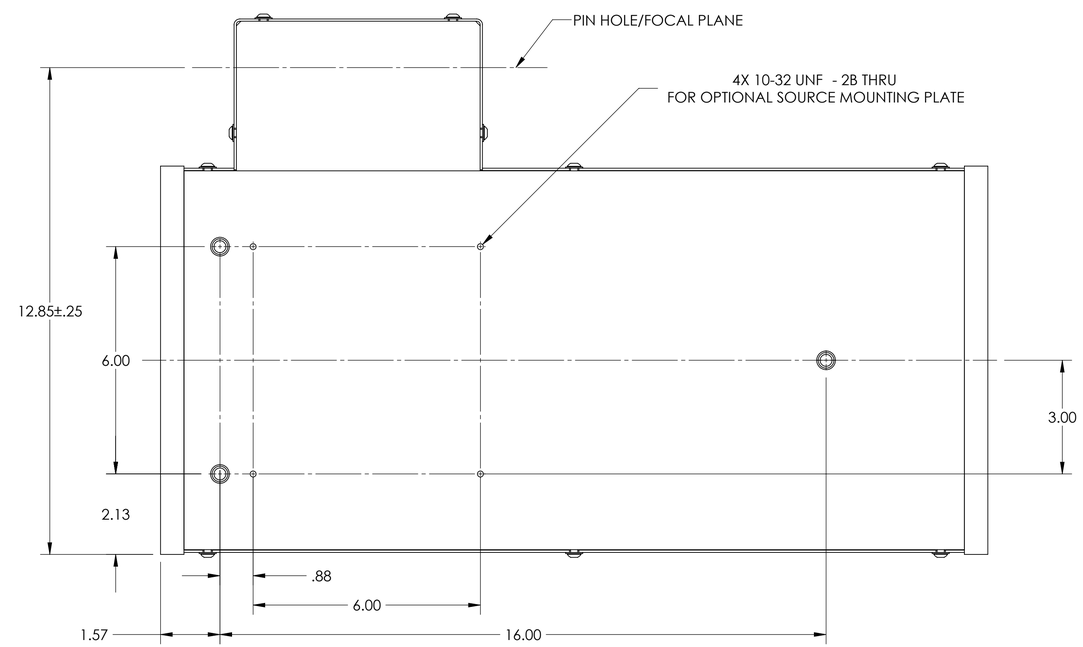

NOT FOR MANUFACTURING. FOR REFERENCE ONLY.

DO NOT SCALE DRAWING
INTERPRET PER ASME Y14.5
THIRD ANGLE PROJECTION

UNLESS SPECIFIED OTHERWISE:
DIMENSIONS ARE IN INCHES
STANDARD TOLERANCES:
.X ±0.03
.XX ±0.01
.XXX ±0.005
ANGULAR: MACH ±10'
BEND ±0.5°
SURFACE FINISH: 63
REMOVE ALL BURRS & BREAK SHARP EDGES - 0.010 MAX. R.

MATERIAL: PER PART
FINISH: PER PART

	NAME	DATE
DRAWN	N. POWERS	3/25/2013
ENG.	-	
MFG.	-	
Q.A.	-	

SORL Space Optics Research Labs, LLC
7 Stuart Road Chelmsford, MA 01824, USA
Ph: (800) 352-7675 FAX: (978) 256-5603
CAGE CODE: 4HRF3

TITLE: TOAN 4.5-4 ASSEMBLY

SIZE: D | DWG. NO. 36091-SALES | REV A
SCALE: 1:2 | WEIGHT: 26.909 lb | SHEET 1 OF 1